Flicker (1/*f*) noise in the critical current of Josephson junctions at 0.09–4.2 K

F. C. Wellstood,[a] C. Urbina,[b] and John Clarke[c]
Department of Physics, University of California, Berkeley, California 94720-7300
and Materials Sciences Division, Lawrence Berkeley National Laboratory, Berkeley, California 94720

(Received 20 July 2004; accepted 8 October 2004)

We have measured the low-frequency noise in the critical current I_c of six dc superconducting quantum interference devices (SQUIDs) with resistively shunted Nb–NbO_x–PbIn Josephson junctions in the temperature range $T=0.09-4.2$ K. Each device is voltage biased, the applied flux is an integer number of flux quanta, and the current fluctuations are measured with a second dc SQUID. At low frequencies f, there is a component of the power spectrum of the critical current fluctuations given approximately by $S_{I_c}(f)=CI_c^2T^2/Af$, where A is the area of both junctions, and $C\approx(3.9\pm0.4)\times10^{-23}$ m^2/K^2. For quantum bits based on Josephson junctions, the scaling of $S_{I_c}(f)$ with T^2 implies that the dephasing time limited by critical current $1/f$ noise should scale as $1/T$ for temperatures down to at least 0.09 K. © *2004 American Institute of Physics*.
[DOI: 10.1063/1.1826236]

There have recently been several experiments demonstrating coherent superpositions of quantum states in a variety of superconducting circuits.[1–8] These experiments open up the possibility of using superconducting devices as quantum bits (qubits) for quantum computation.[9] A major challenge in achieving this goal is the reduction of the sources of decoherence that lead to dephasing of superposed states. While coupling to the external circuit can be a major source of decoherence,[10] there are at least two sources of decoherence that can arise from within the superconducting devices themselves: the motion of trapped flux vortices[11] in the superconductors, and the motion of charges in associated dielectrics or oxides.

It appears that the trapping of vortices can be eliminated by making the superconducting films sufficiently narrow.[12] On the other hand, it is not obvious that charge motion, due to the movement of atoms or the trapping and release of electrons,[13,14] can be suppressed. Charge motion can cause decoherence in at least two distinct ways: by causing charge fluctuations in capacitive elements or by creating fluctuations in the critical current of Josephson junctions.[15–18] The first effect will be important for qubits based on charge,[1,2] while the second will be important for qubits based on flux[4,5] or phase,[6–8] or for charge-flux hybrid devices.[3] The dephasing effects of $1/f$ noise in the critical current have been calculated by Martinis *et al.*[19] and Van Harlingen *et al.*[20]

There have been several prior measurements of $1/f$ noise in the critical current of low-transition temperature (T_c) Josephson junctions.[15–18] However, there seems to be no available information in the range of interest for quantum coherence, that is, below 1 K. By contrast, charge noise measurements in single electron transistors (SETs) have been reported over the range 20 mK to 4.2 K.[21] In this letter, we report measurements of critical current noise in a series of Nb–NbO_x–PbIn junctions at temperatures down to 0.09 K.[22,23]

Our resistively shunted Josephson junctions were fabricated to form dc superconducting quantum interference devices (SQUIDs) in batches of 36 on 2-in.-diam silicon wafers with a 1.2-μm-thick oxide layer. The SQUIDs were patterned in a variety of geometries[22] using standard photolithographic processing. The first step of the process was to deposit a 10-nm-thick Cr film followed by a 30-nm-thick AuCu (25 wt%) alloy; this layer was lifted off to form the shunts each with resistance R. The base electrode of Nb, 200 nm thick, was sputtered onto the wafer and patterned with reactive ion etching in a SF_6O_6 plasma. A 1.5-nm-thick Ti adhesion layer and a 200-nm-thick SiO film were evaporated and lifted off to leave 2-μm-wide slits; a second SiO film, patterned with 2-μm-wide slits perpendicular to the first set, defined the 2×2 μm^2 windows of the junctions. The wafer was diced into 36 chips which were completed individually. After the Nb base electrode had been ion milled with Ar, it was oxidized in an Ar-O_2 (5%) plasma. Immediately afterwards, a 200-nm-thick PbIn (5 wt%) counter-electrode was deposited and lifted off.

For noise measurements, each SQUID was connected in series with a 12 μH superconducting inductor L_{rf}, a wire resistor $R_1\approx0.1$ Ω and the superconducting input coil of a second, thin-film SQUID operated in a flux-locked loop (see Fig. 1). The inductor prevented Josephson oscillations from

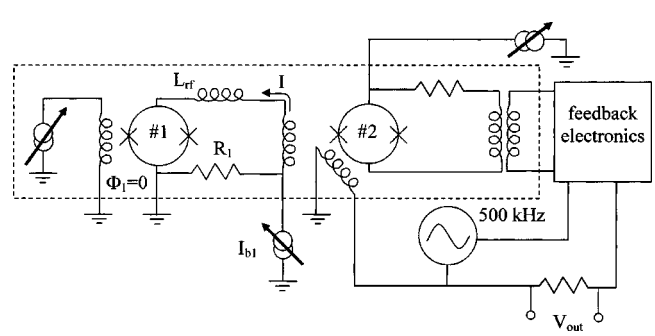

FIG. 1. Experimental configuration for measuring noise in SQUID 1.

[a]Current address: Center for Superconductivity Research, Dept. of Physics, University of Maryland, College Park, MD 20742-4111.
[b]Current address: Quantronics Group, SPEC-CEA Saclay, 91191 Gif-sur-Yvette, France.
[c]Author to whom correspondence should be addressed; electronic mail: jclarke@physics.berkeley.edu

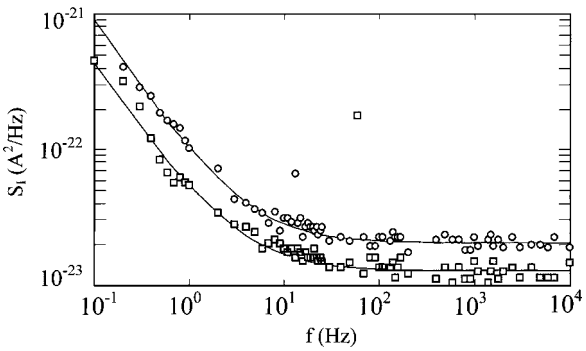

FIG. 2. Current noise measured in two representative SQUIDs measured at $(\partial I_c/\partial\Phi)_v=0$, where there is no sensitivity to flux noise. Upper curve is for $I_c=11$ μA, $T=140$ mK, lower curve for $I_c=5.64$ μA, $T=200$ mK. In each case, solid line shows fit to white noise power spectrum at high frequencies and $1/f$ power spectrum at low frequencies.

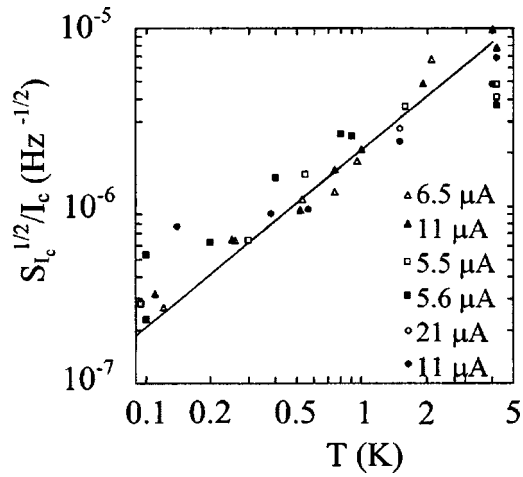

FIG. 3. Normalized critical current noise $S_{I_c}^{1/2}(1\text{ Hz})/I_c$ vs temperature for six devices with critical currents listed. A line of slope unity has been fitted to the data.

SQUID 2 (the measuring SQUID) from reaching the junctions being measured (SQUID 1). Since $R_1 \ll R \approx 8\ \Omega$, SQUID 1 was effectively voltage biased by the applied current. With this arrangement, fluctuations in current passing through SQUID 1 were detected by SQUID 2, which was operated in a flux-locked loop; we measured the spectral density of the current noise by connecting a spectrum analyzer to the output V_{out}. Both SQUIDs were surrounded by a Nb tube that was placed inside a Cu cell attached to the mixing chamber of a dilution refrigerator; during the measurements, the cell was filled with liquid ^{4}He. The current and flux-biased lines were heavily filtered with both low-pass and microwave filters cooled to 4.2 K, and the Dewar was surrounded with a mu-metal shield to attenuate the earth's magnetic field. The temperature was measured with calibrated resistance thermometers, and could also be determined from the Nyquist noise current generated in R_1 with zero bias current in SQUID 1.

To determine the critical current noise in SQUID 1, we adjusted the bias current I_{b1} so that the voltage across SQUID 1 was typically 1–5 μV, and carefully varied the applied flux Φ_1 until the critical current I_c was a maximum and the flux-to-critical-current transfer coefficient $(\partial I_c/\partial\Phi)_v$ was zero. At this point, the current through the SQUID was $I \approx I_c = I_{o1} + I_{o2}$, where I_{o1} and I_{o2} are the critical currents of the two junctions in SQUID 1. Thus, only in-phase fluctuations of the two critical currents contributed to the measured noise, while out-of-phase fluctuations, which generated current noise around the SQUID loop, did not.[24] In addition, any flux noise due to external sources or generated by the motion of flux vortices pinned in the body of the SQUID did not contribute to the measured noise.[24]

Figure 2 shows two representative noise power spectra. In both cases, we observe white noise at high frequencies, which arises from the SQUID shunts, while below about 10 Hz the noise power increases with decreasing frequency with an asymptotic slope close to −1. To compare results on different devices, we normalize the spectrum of the noise to the critical current. Figure 3 shows $S_{I_c}^{1/2}(1\text{ Hz})/I_c$ vs temperature T for six devices. On this log-log plot, we have fitted the data below 4 K to a straight line of slope unity, implying that $S_{I_c}(1\text{ Hz})$ scales as $T^2 I_c^2$. Since the junctions contribute incoherently and one expects that $S_{I_c}(f) \propto I_c^2/A$ for $1/f$ noise arising from an ensemble of uncorrelated charge fluctuators, we can summarize the data in the form

$$S_{I_c}(f) = C I_c^2 T^2 / A f. \tag{1}$$

Here $A=8$ μm^2 is the combined area of the junctions, and $C=(3.9\pm0.4)\times10^{-23}$ m^2/K^2. We note that $S_{I_c}(1\text{ Hz}, 4.2)/I_c^2 = 8.6\times10^{-11}$ Hz^{-1} is within a factor of 2 of the value 1.44×10^{-10} Hz^{-1} obtained by averaging over a wide range of junction areas and critical currents for several different junction technologies.[20]

The observation of $1/f$ critical current noise with a power spectrum scaling as T^2 deserves some discussion. First, we note that T^2 scaling has been observed in charge noise in single electron transistors (SETs).[21] Since charge motion is the underlying cause of both charge noise and critical current noise, at first sight, it may not be surprising to observe T^2 scaling in critical current noise. However, the T^2 dependence is not easily reconciled with a simple electron trapping model. In this scheme, a single electron is thermally activated[13] or undergoes tunneling[14] from a superconducting electrode into a trap in the tunnel barrier, where it locally modifies the barrier height and hence the critical current. Subsequently, the electron exits the trap, and the barrier height is restored to its original height. The superposition of a number of such random telegraph signals (RTSs) constitutes $1/f$ noise. However, both the number of electrons available to occupy the trap and the number of final states available should scale as $\exp(-\Delta/k_B T)$, where Δ is the superconducting energy gap. The observed temperature dependence is incompatible with this exponential scaling, leading one to postulate other mechanisms. One possibility is that tiny regions of the electrodes are normal—for example, at edges or because of a normal metal weak link across the barrier—so that the electron population is independent of temperature. An alternative possibility is that the charge motion arises from the reconfiguration of ions in the tunnel barrier, so that the local charge jumps between two sites at different distances from one of the electrodes, thereby modifying the tunnel barrier. Indeed, Rogers and Buhrman[14] invoked atomic reconfiguration to reconcile their observations of RTSs in normal metal junctions with a tunneling description. However, since tunneling would yield noise that is essentially independent of temperature, one would have to postulate a thermally activated atomic reconfiguration, which seems very unlikely at such low temperatures. Recently,

Simmonds *et al.*[25] proposed a model involving an ensemble of conduction channels in the barrier that randomly turn on and off.

In conclusion, the measured spectral density of the $1/f$ critical current noise of six $Nb-NbO_x-PbIn$ tunnel junctions scales approximately as T^2 over the temperature range from 4.2 to 0.09 K. Since it has been shown that the decoherence time $\tau_{1/f}$ in Josephson-junction-based qubits would scale as $S_{I_c}^{-1/2}(f)$,[19,20] this result implies that $\tau_{1/f} \propto 1/T$. It would obviously be of considerable interest to perform further measurements in the 10–100 mK range to see whether the $1/f$ noise continues to decrease or flattens out at some temperature. To perform such measurements, it would be advantageous to make the junctions of small area (say, $100 \times 100\ \mathrm{nm}^2$) and relatively high critical current in order to increase the relative magnitude of the critical current noise. It would also be of great interest to see if the magnitude of the noise could be reduced, for example, by making barriers of higher crystalline quality or different compositions.[25] In the meantime, the results presented here enable one to estimate the decoherence induced by $1/f$ critical current noise at temperatures down to 0.09 K.

The authors are indebted to Britton Plourde, Dale Van Harlingen, and J. M. Martinis for enlightening conversations. The authors gratefully acknowledge the use of the Microelectronic Facility at the University of California, Berkeley. This work was supported by the Director, Office of Science, Office of Basic Energy Sciences, Division of Materials Sciences and Engineering of the U.S. Department of Energy under Contract No. DE-AC03-76SF00098.

[1] Y. A. Pashkin, T. Yamamoto, O. Astafiev, Y. Nakamura, D. V. Averin, and J. S. Tsai, Nature (London) **421**, 823 (2003).
[2] T. Duty, D. Gunnarsson, K. Bladh, and P. Delsing, Phys. Rev. B **69**, 140503(R) (2004).
[3] D. Vion, A. Aassime, A. Cottet, P. Joyez, H. Pothier, C. Urbina, D. Esteve, and M. H. Devoret, Science **296**, 886 (2002).
[4] J. R. Friedman, V. Patel, W. Chen, S. K. Tolpygo, and J. E. Lukens, Nature (London) **406**, 43 (2000).
[5] I. Chiorescu, Y. Nakamura, C. J. P. M. Harmans, and J. E. Mooij, Science **299**, 1869 (2003).
[6] Y. Yu, S. Han, X. Chu, S.-I. Chu, and Z. Wang, Science **296**, 889 (2002).
[7] J. M. Martinis, S. Nam, J. Aumentado, and C. Urbina, Phys. Rev. Lett. **89**, 117901 (2002).
[8] A. J. Berkley, H. Xu, R. C. Ramos, M. A. Gubrud, F. W. Strauch, P. R. Johnson, J. R. Anderson, A. J. Dragt, C. J. Lobb, and F. C. Wellstood, Science **300**, 1548 (2003).
[9] M. Nielsen and I. Chuang, *Quantum Computation and Quantum Information* (Cambridge University Press, Cambridge, UK, 2000).
[10] A. J. Leggett, *Quantum mechanics at the macroscopic level, Les Houches, Session XLVI-Chance and Matter*, edited by J. Souletie, J. Vannimenus, and R. Stora, (Elsevier, Amsterdam, 1987) p. 395.
[11] M. J. Ferrari, M. Johnson, F. C. Wellstood, J. J. Kingston, T. J. Shaw, and J. Clarke, J. Low Temp. Phys. **94**, 15 (1994).
[12] E. Dantsker, S. Tanaka, and J. Clarke, Appl. Phys. Lett. **70**, 2037 (1997).
[13] C. T. Rogers and R. A. Buhrman, Phys. Rev. Lett. **53**, 1272 (1984).
[14] C. T. Rogers and R. A. Buhrman, Phys. Rev. Lett. **55**, 859 (1985).
[15] R. T. Wakai and D. J. Van Harlingen, Appl. Phys. Lett. **49**, 593 (1986).
[16] V. Foglietti, W. J. Gallagher, M. B. Ketchen, A. W. Kleinsasser, R. H. Koch, S. I. Raider, and R. L. Sandstrom, Appl. Phys. Lett. **49**, 1393 (1986).
[17] B. Savo, F. C. Wellstood, and J. Clarke, Appl. Phys. Lett. **50**, 1757 (1987).
[18] R. T. Wakai and D. J. Van Harlingen, Phys. Rev. Lett. **58**, 1687 (1987).
[19] J. M. Martinis, S. Nam, J. Aumentado, K. M. Lang, and C. Urbina, Phys. Rev. B **67**, 094510 (2003).
[20] D. J. Van Harlingen, T. L. Robertson, B. L. T. Plourde, P. A. Reichardt, T. R. Crane, and J. Clarke, Phys. Rev. B (to be published).
[21] M. Kenyon, C. J. Lobb, and F. C. Wellstood, J. Appl. Phys. **88**, 6536 (2000).
[22] F. C. Wellstood, Ph.D. thesis, University of California, Berkeley, 1988.
[23] A brief preliminary account of this work appears in F. C. Wellstood, C. Urbina, and J. Clarke, IEEE Trans. Magn. **MAG-23**, 1662 (1987).
[24] R. H. Koch, J. Clarke, W. M. Goubau, J. M. Martinis, C. M. Pegrum, and D. J. Van Harlingen, J. Low Temp. Phys. **51**, 207 (1983).
[25] R. W. Simmonds, K. M. Lang, D. A. Hite, D. P. Pappas, and J. M. Martinis, cond-mat/0402470.